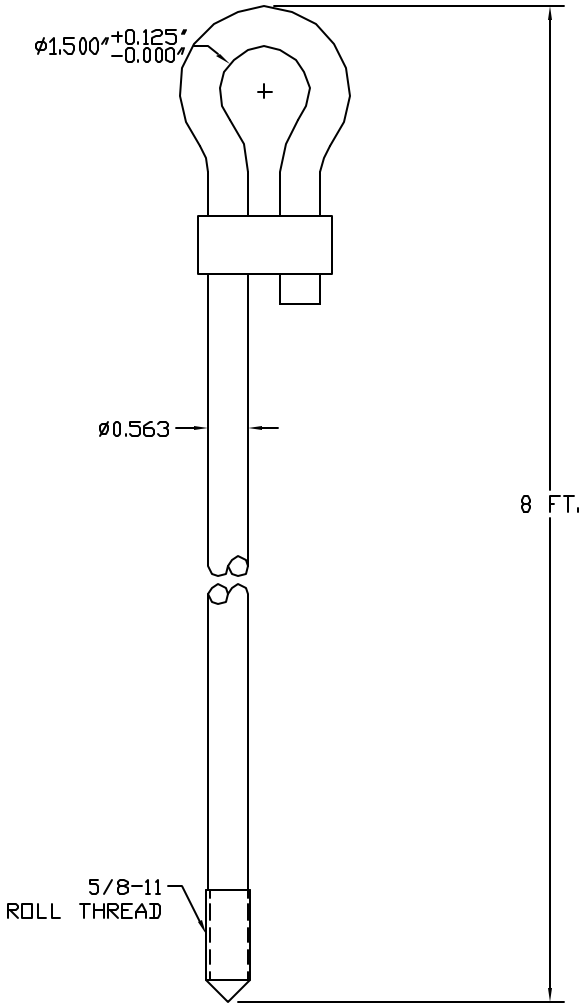

COPPER CLAD MATERIAL

ESTIMATED WEIGHT: 8.7 LBS

APPROVED

☐ AS DRAWN: _____

☐ AS NOTED: _____

DATE: _____

THIS DOCUMENT AND THE CONTENTS THEREOF IS THE PROPERTY OF HARGER INC., AND IS FURNISHED TO YOU FOR INFORMATION ONLY. THE INFORMATION CONTAINED HEREIN IS CONFIDENTIAL AND OF A PROPRIETARY NATURE AND MUST NOT BE DISCLOSED TO THIRD PARTIES WITHOUT THE EXPRESS WRITTEN APPROVAL OF HARGER INC.

LET	REVISION	DATE	BY
–	–	–	–
–	–	–	–
–	–	–	–
–	–	–	–
–	–	–	–
A	ADDED BENDING NOTE	022607	DVB

TOLERANCES UNLESS NOTED:
FRACTIONAL +/- 1/16
.00 +/- .010
.000 +/- .005

PART NO. 588TD

ø5/8 IN X 8 FT TIE DOWN GROUND ROD

SUMMIT

–

DRAWN BY: LAL

CHECKED BY: –

DATE: 100704

HARGER™

301 ZIEGLER DRIVE
GRAYSLAKE, IL 60030
(847) 548-8700

REVISION: A

SCALE: 3/8

SHEET: 1 OF 1